CANADA ENDURIDE USA

1880 Provinciale Street
Quebec, Quebec
Canada, G1N 4A2
Phone:418-266-7777
Fax: 418-266-0121

CUSTOMER:
CONTACT:
PHONE:
FAX:
E-mail:
DATE:

QUANTITY OF FRAME:
DIAMETER ROLLER:
ANGLE:

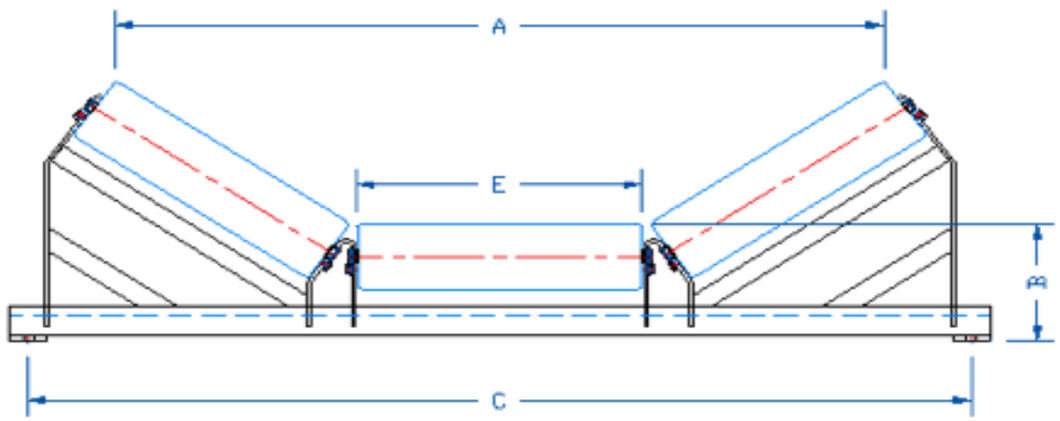

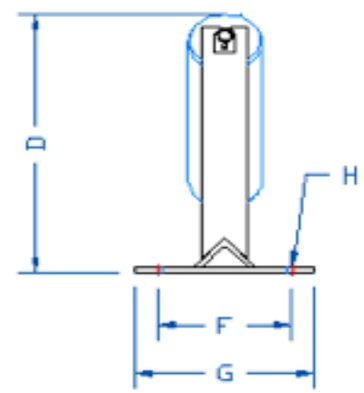

MATERIAL		
Frame	STEEL	
STAINLESS STEEL		
S304	S316	
SHELL:	STEEL	
STAINLESS STEEL		
OTHER:IMPACT HDPE UHMW		

Coating		
Painted	Epoxy	
	Anti-rust Single coat	
	Polyurethane	
Galvanized		
	hot	
	cold	

CEMA		
	B	
	C	
	D	
	E	

ROLLER DIAMETER	DIM A	DIM B	C/C BOLT Frame C	DIM D	ROLLER LENGTH E	C/C BOLT Foot Plate F	Foot Plate LENGTH G	DIA. BOLT H

STYLE	ROLLER DIAMETER A	SHAFT LENGTH B	ROLLER LENGTH B	SHAFT DIAMETER D	THICNESS OF SHAFT E	LENGTH OF SHOLDER F	CENTER OF HOLE G	THREADS DEPTH I	THREADS DIAMETER J
1									
2									
3									
4									